Appendix F

coursing and layout tables

Vertical Coursing Chart

Table F.1 – Vertical Coursing Chart

# of Courses	Total Height	Add 1 Ht. adjuster (3 3/8")	Add 2 Ht. adjusters (6 3/4")	Add 3 Ht. adjusters (10 1/8")
1	16 3/4"	n/a	n/a	n/a
2	33 1/2"	36 7/8"	n/a	n/a
3	50 1/4"	53 5/8"	57"	n/a
4	67"	70 3/8"	73 3/4"	77 1/8"
5	83 3/4"	87 1/8"	90 1/2"	93 7/8"
6	100 1/2"	103 7/8"	107 1/4"	110 5/8"
7	117 1/4"	120 5/8"	124"	127 3/8"
8	134"	137 3/8"	140 3/4"	144 1/8"
9	150 3/4"	154 1/8"	157 1/2"	160 7/8"
10	167 1/2"	170 7/8"	174 1/4"	177 5/8"
11	184 1/4"	187 5/8"	191"	194 3/8"
12	201"	204 3/8"	207 3/4"	211 1/8"
13	217 3/4"	221 1/8"	224 1/2"	227 7/8"
14	234 1/2"	237 7/8"	241 1/4"	244 5/8"
15	251 1/4"	254 5/8"	258"	261 3/8"
16	268"	271 3/8"	274 3/4"	278 1/8"
17	284 3/4"	288 1/8"	291 1/2"	294 7/8"
18	301 1/2"	304 7/8"	308 1/4"	311 5/8"
19	318 1/4"	321 5/8"	325"	328 3/8"
20	335"	338 3/8"	341 3/4"	345 1/8"
21	351 3/4"	355 1/8"	358 1/2"	361 7/8"
22	368 1/2"	371 7/8"	375 1/4"	378 5/8"
23	385 1/4"	388 5/8"	392"	395 3/8"
24	402"	405 3/8"	408 3/4"	412 1/8"
25	418 3/4"	422 1/8"	425 1/2"	428 7/8"

When ordering, please keep in mind the quantities in which Arxx™ Wallsystem forms are bundled for shipping.

When performing estimates, please contact your local Arxx Wallsystem distributor for most recent pricing and availability.

Layout Tables

Table F.2 – 4" Arxx™ Preferred Wall Dimensions

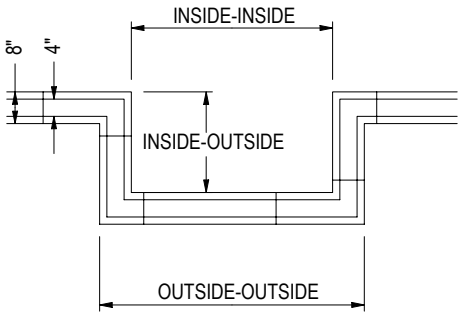

Outside-Outside Corner (ft-in)	Inside-Inside Corner (ft-in)	Inside-Outside Corner (ft-in)
3' 4"	2' 0"	2' 8"
4' 0"	**2' 8"**	**3' 4"**
4' 8"	3' 4"	4' 0"
5' 4"	4' 0"	4' 8"
6' 0"	4' 8"	5' 4"
6' 8"	5' 4"	6' 0"
7' 4"	6' 0"	6' 8"
8' 0"	**6' 8"**	**7' 4"**
8' 8"	7' 4"	8' 0"
9' 4"	8' 0"	8' 8"
10' 0"	8' 8"	9' 4"
10' 8"	9' 4"	10' 0"
11' 4"	10' 0"	10' 8"
12' 0"	**10' 8"**	**11' 4"**
12' 8"	11' 4"	12' 0"
13' 4"	12' 0"	12' 8"
14' 0"	12' 8"	13' 4"
14' 8"	13' 4"	14' 0"
15' 4"	14' 0"	14' 8"
16' 0"	**14' 8"**	**15' 4"**
16' 8"	15' 4"	16' 0"
17' 4"	16' 0"	16' 8"
18' 0"	16' 8"	17' 4"
18' 8"	17' 4"	18' 0"
19' 4"	18' 0"	18' 8"
20' 0"	**18' 8"**	**19' 4"**
20' 8"	19' 4"	20' 0"
21' 4"	20' 0"	20' 8"
22' 0"	20' 8"	21' 4"
22' 8"	21' 4"	22' 0"

Outside-Outside Corner (ft-in)	Inside-Inside Corner (ft-in)	Inside-Outside Corner (ft-in)
23' 4"	22' 0"	22' 8"
24' 0"	**22' 8"**	**23' 4"**
24' 8"	23' 4"	24' 0"
25' 4"	24' 0"	24' 8"
26' 0"	24'' 8"	25' 4"
26' 8"	25' 4"	26' 0"
27' 4"	26' 0"	26' 8"
28' 0"	**26' 8"**	**27' 4"**
28' 8"	27' 4"	28' 0"
29' 4"	28' 0"	28' 8"
30' 0"	28' 8"	29' 4"
30' 8"	29' 4"	30' 0"
31' 4"	30' 0"	30' 8"
32' 0"	**30' 8"**	**31' 4"**
32' 8"	31' 4"	32' 0"
33' 4"	32' 0"	32' 8"
34' 0"	32' 8"	33' 4"
34' 8"	33' 4"	34' 0"
35' 4"	34' 0"	34' 8"
36' 0"	**34' 8"**	**35' 4"**
36' 8"	35' 4"	36' 0"
37' 4"	36' 0"	36' 8"
38' 0"	36' 8"	37' 4"
38' 8"	37' 4"	38' 0"
39' 4"	38' 0"	38' 8"
40' 0"	**38' 8"**	**39' 4"**
40' 8"	39' 4"	40' 0"
41' 4"	40' 0"	40' 8"
42' 0"	40' 8"	41' 4"
42' 8"	41' 4"	42' 0"

Notes

1. Colored dimensions indicate preferred wall length dimensions that allow the use of full-size Arxx blocks (no cutting of blocks required).
2. Vertical cut lines on blocks are 1 9/64" apart; therefore, if a cut is required this is the absolute minimum dimension allowable. This table shows increments of 8" to allow block webs to be aligned between successive courses for attachment of interior/exterior finishes.
3. Field cuts around window/door openings do not need to be on cut lines; the opening can fall anywhere in the wall envelope.

Table F.3 – 6" Arxx™ Preferred Wall Dimensions

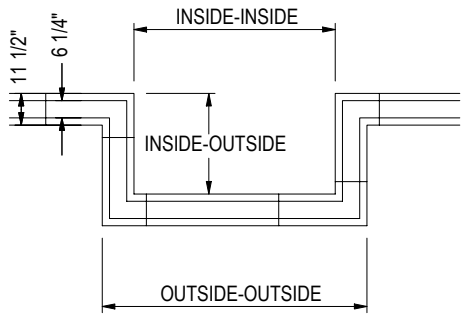

Outside-Outside Corner (ft-in)	Inside-Inside Corner (ft-in)	Inside-Outside Corner (ft-in)
3' 4"	1' 5"	2' 4 ½"
4' 0"	**2' 1"**	**3' ½"**
4' 8"	2' 9"	3' 8 ½"
5' 4"	3' 5"	4' 4 ½"
6' 0"	4' 1"	5' ½"
6' 8"	4' 9"	5' 8 ½"
7' 4"	5' 5"	6' 4 ½"
8' 0"	**6' 1"**	**7' ½"**
8' 8"	6' 9"	7' 8 ½"
9' 4"	7' 5"	8' 4 ½"
10' 0"	8' 1"	9' ½"
10' 8"	8' 9"	9' 8 ½"
11' 4"	9' 5"	10' 4 ½"
12' 0"	**10' 1"**	**11' ½"**
12' 8"	10' 9"	11' 8 ½"
13' 4"	11' 5"	12' 4 ½"
14' 0"	12' 1"	13' ½"
14' 8"	12' 9"	13' 8 ½"
15' 4"	13' 5"	14' 4 ½"
16' 0"	**14' 1"**	**15' ½"**
16' 8"	14' 9"	15' 8 ½"
17 4"	15' 5"	16' 4 ½"
18' 0"	16' 1"	17' ½"
18' 8"	16' 9"	17' 8 ½"
19' 4"	17' 5"	18' 4 ½"
20' 0"	**18' 1"**	**19' ½"**
20' 8"	18' 9"	19' 8 ½"
21' 4"	19' 5"	20' 4 ½"
22' 0"	20' 1"	21' ½"
22' 8"	20' 9"	21' 8 ½"

Outside-Outside Corner (ft-in)	Inside-Inside Corner (ft-in)	Inside-Outside Corner (ft-in)
23' 4"	21' 5"	22' 4 ½"
24' 0"	**22' 1"**	**23' ½"**
24' 8"	22' 9"	23' 8 ½"
25' 4"	23' 5"	24' 4 ½"
26' 0"	24' 1"	25' ½"
26' 8"	24' 9"	25' 8 ½"
27' 4"	25' 5"	26' 4 ½"
28' 0"	**26' 1"**	**27' ½"**
28' 8"	26' 9"	27' 8 1/2"
29' 4"	27' 5"	28' 4 ½"
30' 0"	28' 1"	29' ½"
30' 8"	28' 9"	29' 8 ½"
31' 4"	29' 5"	30' 4 ½"
32' 0"	**30' 1"**	**31' ½"**
32' 8"	30' 9"	31' 8 ½"
33' 4"	31' 5"	32' 4 ½"
34' 0"	32' 1"	33' ½"
34' 8"	32' 9"	33 8 ½"
35' 4"	33' 5"	34' 4 ½"
36' 0"	**34' 1"**	**35' ½"**
36' 8"	34' 9"	35' 8 ½"
37' 4"	35' 5"	36' 4 ½"
38' 0"	36' 1"	37' ½"
38' 8"	36' 9"	37' 8 ½"
39' 4"	37' 5"	38' 4 ½"
40' 0"	**38' 1"**	**39' ½"**
40' 8"	38' 9"	39' 8 ½"
41' 4"	39' 5"	40' 4 ½"
42' 0"	40' 1"	41' ½"
42' 8"	40' 9"	41' 8 ½"

Notes

1. Colored dimensions indicate preferred wall length dimensions that allow the use of full-size Arxx blocks (no cutting of blocks required).
2. Vertical cut lines on blocks are 1 9/64" apart; therefore, if a cut is required this is the absolute minimum dimension allowable. This table shows increments of 8" to allow block webs to be aligned between successive courses for attachment of interior/exterior finishes.
3. Field cuts around window/door openings do not need to be on cut lines; the opening can fall anywhere in the wall envelope.

Table F.4 – 8" Arxx™ Preferred Wall Dimensions

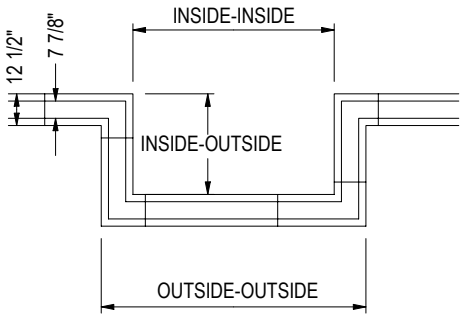

Outside-Outside Corner (ft-in)	Inside-Inside Corner (ft-in)	Inside-Outside Corner (ft-in)
3' 4"	1' 3"	2' 3 ½"
4' 0"	**1' 11"**	**2' 11 ½"**
4' 8"	2' 7"	3' 7 ½"
5' 4"	3' 3"	4' 3 ½"
6' 0"	3' 11"	4' 11 ½"
6' 8"	4' 7"	5' 7 ½"
7' 4"	5' 3"	6' 3 ½"
8' 0"	**5' 11"**	**6' 11 ½"**
8' 8"	6' 7"	7' 7 ½"
9' 4"	7' 3"	8' 3 ½"
10' 0"	7' 11"	8' 11 ½"
10' 8"	8' 7"	9' 7 ½"
11' 4"	9' 3"	10' 3 ½"
12' 0"	**9' 11"**	**10' 11 ½"**
12' 8"	10' 7"	11' 7 ½"
13' 4"	11' 3"	12' 3 ½"
14' 0"	11' 11"	12' 11 ½"
14' 8"	12' 7"	13' 7 ½"
15' 4"	13' 3"	14' 3 ½"
16' 0"	**13' 11"**	**14' 11 ½"**
16' 8"	14' 7"	15' 7 ½"
17 4"	15' 3"	16' 3 ½"
18' 0"	15' 11"	16' 11 ½"
18' 8"	16' 7"	17' 7 ½"
19' 4"	17' 3"	18' 3 ½"
20' 0"	**17' 11"**	**18' 11 ½"**
20' 8"	18' 7"	19' 7 ½"
21' 4"	19' 3"	20' 3 ½"
22' 0"	19' 11"	20' 11 ½"
22' 8"	20' 7"	21' 7 ½"

Outside-Outside Corner (ft-in)	Inside-Inside Corner (ft-in)	Inside-Outside Corner (ft-in)
23' 4"	21' 3"	22' 3 ½"
24' 0"	**21' 11"**	**22' 11 ½"**
24' 8"	22' 7"	23' 7 ½"
25' 4"	23' 3"	24' 3 ½"
26' 0"	23' 11"	24' 11 ½"
26' 8"	24' 7"	25' 7 ½"
27' 4"	25' 3"	26' 3 ½"
28' 0"	**25' 11"**	**26' 11 ½"**
28' 8"	26' 7"	27' 7 ½"
29' 4"	27' 3"	28' 3 ½"
30' 0"	27' 11"	28' 11 ½"
30' 8"	28' 7"	29' 7 ½"
31' 4"	29' 3"	30' 3 ½"
32' 0"	**29' 11"**	**30' 11 ½"**
32' 8"	30' 7"	31' 7 ½"
33' 4"	31' 3"	32' 3 ½"
34' 0"	31' 11"	32' 11 ½"
34' 8"	32' 7"	33 7 ½"
35' 4"	33' 3"	34' 3 ½"
36' 0"	**33' 11"**	**34' 11 ½"**
36' 8"	34' 7"	35' 7 ½"
37' 4"	35' 3"	36' 3 ½"
38' 0"	35' 11"	36' 11 ½"
38' 8"	36' 7"	37' 7 ½"
39' 4"	37' 3"	38' 3 ½"
40' 0"	**37' 11"**	**38' 11 ½"**
40' 8"	38' 7"	39' 7 ½"
41' 4"	39' 3"	40' 3 ½"
42' 0"	39' 11"	40' 11 ½"
42' 8"	40' 7"	41' 7 ½"

Notes

1. Colored dimensions indicate preferred wall length dimensions that allow the use of full-size Arxx blocks (no cutting of blocks required).
2. Vertical cut lines on blocks are 1 9/64" apart; therefore, if a cut is required this is the absolute minimum dimension allowable. This table shows increments of 8" to allow block webs to be aligned between successive courses for attachment of interior/exterior finishes.
3. Field cuts around window/door openings do not need to be on cut lines; the opening can fall anywhere in the wall envelope.

Table F.5 – 10" Arxx™ Preferred Wall Dimensions

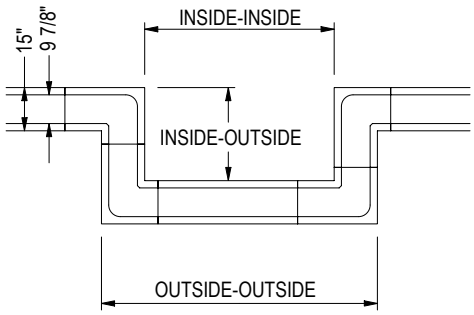

Outside-Outside Corner (ft-in)	Inside-Inside Corner (ft-in)	Inside-Outside Corner (ft-in)
3' 11"	**1' 5"**	**2' 8"**
4' 7"	2' 1"	3' 4"
5' 3"	2' 9"	4' 0"
5' 11"	3' 5"	4' 8"
6' 7"	4' 1"	5' 4"
7' 3"	4' 9"	6' 0"
7' 11"	**5' 5"**	**6' 8"**
8' 7"	6' 1"	7' 4"
9' 3"	6' 9"	8' 0"
9' 11"	7' 5"	8' 8"
10' 7"	8' 1"	9' 4"
11' 3"	8' 9"	10' 0"
11' 11"	**9' 5"**	**10' 8"**
12' 7"	10' 1"	11' 4"
13' 3"	10' 9"	12' 0"
13' 11"	11' 5"	12' 8"
14' 7	12' 1"	13' 4"
15' 3"	12' 9"	14' 0"
15' 11"	**13' 5"**	**14' 8"**
16' 7"	14' 1"	15' 4"
17' 3"	14' 9"	16' 0"
17' 11"	15' 5"	16' 8"
18' 7"	16' 1"	17' 4"
19' 3"	16' 9"	18' 0"
19' 11"	**17' 5"**	**18' 8"**
20' 7"	18' 1"	19' 4"
21' 3"	18' 9"	20' 0"
22' 0"	19' 5"	20' 8"
22' 8"	20' 1"	21' 4"
23' 3"	20' 9"	22' 0"

Outside-Outside Corner (ft-in)	Inside-Inside Corner (ft-in)	Inside-Outside Corner (ft-in)
23' 11"	**21' 5"**	**22' 8"**
24' 7"	22' 1"	23' 4"
25' 3"	22' 9"	24' 0"
25' 11"	23' 5"	24' 8"
26' 7"	24' 1"	25' 4"
27' 3"	24' 9"	26' 0"
27' 11"	**25' 5"**	**26' 8"**
28' 7"	26' 1"	27' 4"
29' 3"	26' 9"	28' 0"
39' 11"	27' 5"	28' 8"
30' 7"	28' 1"	29' 4"
31' 3"	28' 9"	30' 0"
31' 11"	**29' 5"**	**30' 8"**
32' 7"	30' 1"	31' 4"
33' 3"	30' 9"	32' 0"
33' 11"	31' 5"	32' 8"
34' 7"	32' 1"	33 4"
35' 3"	32' 9"	34' 0"
35' 11"	**33' 5"**	**34' 8"**
36' 7"	34' 1"	35' 4"
37' 3"	34' 9"	36' 0"
37' 11"	35' 5"	36' 8"
38' 7"	36' 1"	37' 4"
39' 3"	36' 9"	38' 0"
39' 11"	**37' 5"**	**38' 8"**
40' 7"	38' 1"	39' 4"
41' 3"	38' 9"	40' 0"
41' 11"	39' 5"	40' 8"
42' 7"	40' 1"	41' 4"
43' 3"	40' 8"	42' 0"

Notes

1. Colored dimensions indicate preferred wall length dimensions that allow the use of full-size Arxx blocks (no cutting of blocks required).
2. Vertical cut lines on blocks are 1 9/64" apart; therefore, if a cut is required this is the absolute minimum dimension allowable. This table shows increments of 8" to allow block webs to be aligned between successive courses for attachment of interior/exterior finishes.
3. Field cuts around window/door openings do not need to be on cut lines; the opening can fall anywhere in the wall envelope.

Table F.6 – 6" Arxx™ Fixed 45° Form Preferred Dimensions

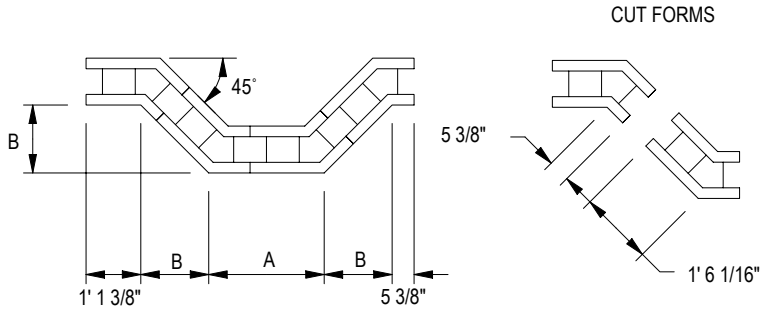

Dimension A (ft-in)	Dimension B (ft-in)
2' 4 3/16"	**1' 4 9/16"**
3' 3/16"	1' 10 1/4"
3' 8 3/16"	2' 3 7/8"
4' 4 3/16"	2' 9 1/2"
5' 3/16"	3' 3 3/16"
5' 8 3/16"	3' 8 7/8"
6' 4 3/16"	**4' 2 1/2"**
7' 3/16"	4' 8 3/16"
7' 8 3/16"	5' 1 13/16"
8' 4 3/16"	7' 7 1/2"
9' 3/16"	6' 1 1/8"
9' 8 3/16"	6' 6 3/4"
10' 4 3/16"	**8' 1/2"**

Notes

1. Colored dimensions indicate preferred wall length dimensions that allow the use of full-size Arxx blocks (no cutting of standard straight blocks required). Fixed 45° form blocks must be cut to dimensions shown. Values in Dimension A & B columns can be used in any combination required to achieve a desired bay geometry.
2. Vertical cut lines on blocks are 1 9/64" apart; therefore, if a cut is required this is the absolute minimum dimension allowable. This table shows increments of 8" to allow block webs to be aligned between successive courses for attachment of interior/exterior finishes.
3. Field cuts around window/door openings do not need to be on cut lines; the opening can fall anywhere in the wall envelope.
4. Dimensions rounded to nearest 1/16".